BURFORD BLANKS
quality surfboard foam
CURRUMBIN QUEENSLAND AUSTRALIA

BLANK:	9'7" F
LENGTH:	9'8"1/4" (2952mm)
WIDTH:	24 1/2" (622mm)
THICKNESS:	3 11/16" (94mm)

PLAN SHAPE

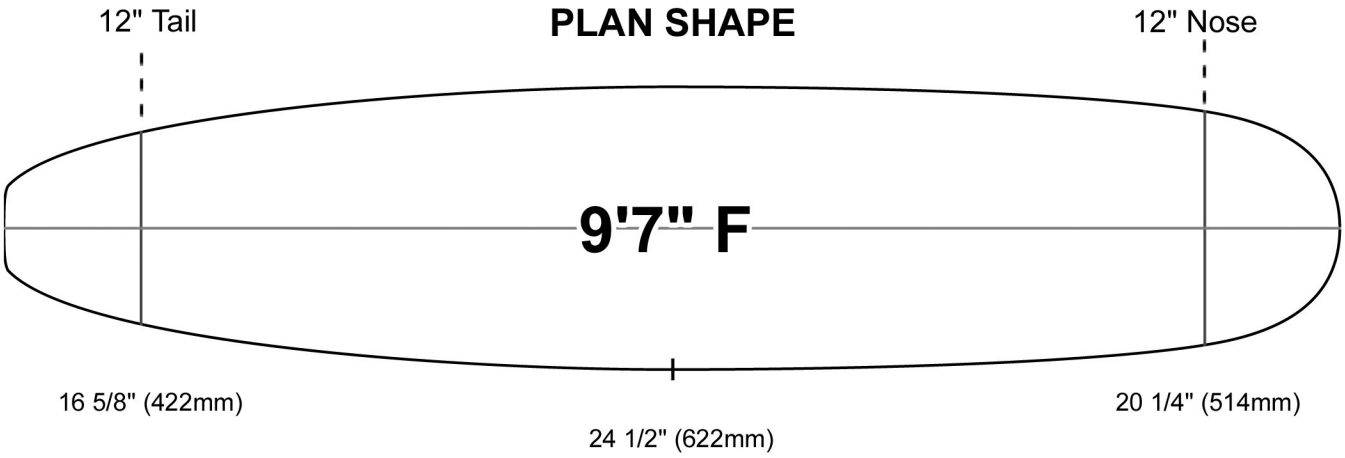

MK 1 ROCKER

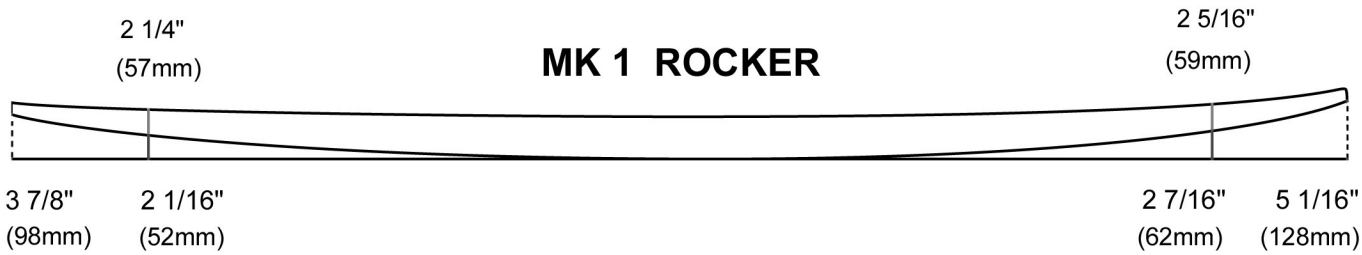

MK 2 ROCKER

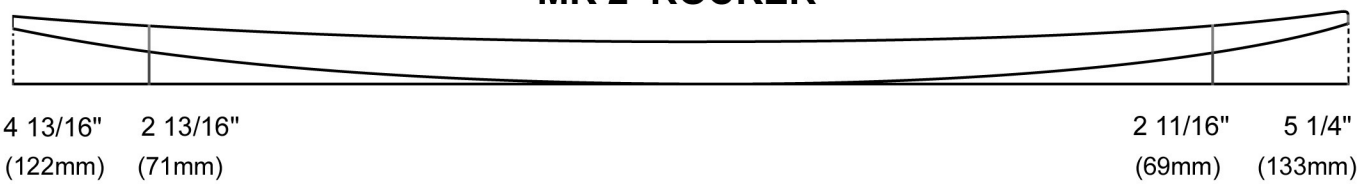

NOSE RIDER ROCKER

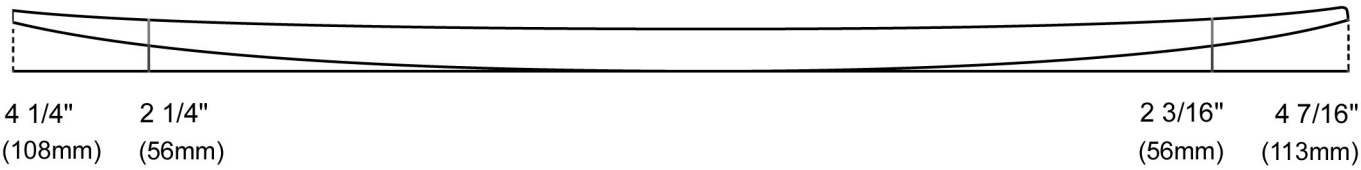

SLICES

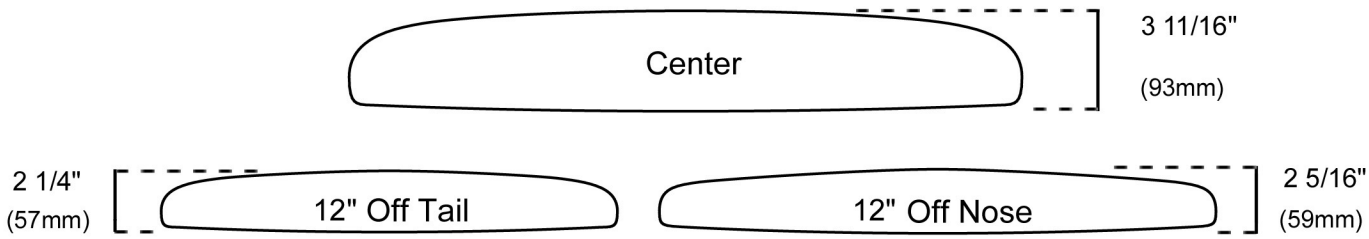

www.burfordblanks.com.au